Safety for Industrial Process

Industrial Range

# F series

## Pressure switches and Temperature switches

## Characteristics*

- Gauge, absolute or differential pressure control
- Temperature control: direct bulb or through capillary
- Electrical contact or pneumatic signal output
- Protection for areas involving an explosion risk (ATEX)
  - Explosion-proof enclosure
  - Intrinsic safety
  - Increased safety
  - Explosion-proof contact
  - Constructional safety

** According to model*

## Other specific features

- Compact industrial series
- Low vibration sensitivity
- SIL2 capability
- Harsh environment versions available on request
- Made in France

www.georgin.com

**Dodavatel pro ČR:** o.z. MERES, HENNLICH s.r.o.● Českolipská 9, 412 01 Litoměřice
meres@hennlich.cz ● www.hennlich.cz/meres ● tel.: 416 711 203

# Contents



**Note:**
Subject to modifications due to technical advances



**Dodavatel pro ČR:** o.z. MERES, HENNLICH s.r.o.● Českolipská 9, 412 01 Litoměřice
meres@hennlich.cz ● www.hennlich.cz/meres ● tel.: 416 711 203

# Introduction

GEORGIN F Series PRESSURE SWITCHES and TEMPERATURE SWITCHES offer an extensive range of equipment suitable for the harshest operating conditions. The series is a justified choice whenever precision and reliability are necessary criteria.

## APPLICATIONS

- thermal or nuclear energy generation
- the oil industry, from drilling to refining
- chemical and petrochemicals
- natural or liquefied gas transport and storage
- gas supercharging
- gas, steam or hydraulic turbines
- diesel engines, pumps and compressors
- shipbuilding for merchant or military navy
- steam circuits, furnaces and burners
- rail transport braking safety
- silos
- water treatment

## SMOOTH ARTICULATION PRESSURE AND TEMPERATURE SWITCHES FOR INDUSTRIAL USE WHERE HIGH RESISTANCE TO VIBRATIONS IS REQUIRED

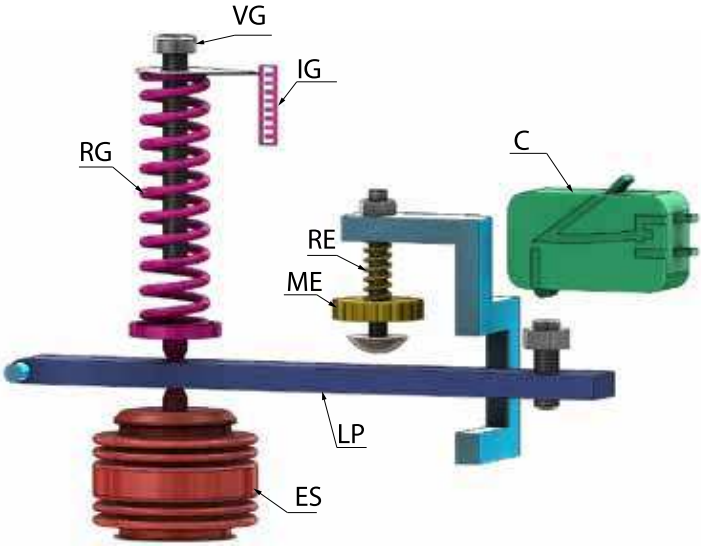


| | |
|---|---|
| VG | Set point (Range adjustment screw) |
| RG | Range spring |
| IG | Range index |
| RE | Dead band adjustment spring |
| ME | Dead band adjustment knob |
| ES | Sensing element |
| C | Switch |
| LP | Flexible arm |

## WORKING PRINCIPLE

The pressure or temperature is applied to the sensing element (SE), whose position then changes, acting on the flexible arm (FA). The force produced in this way is balanced by the spring (RS). This is how the set point is adjusted. As the set point is approached, the change in forces disturbs the balance (FA) and acts on the contact.
A second spring (DBS) acting on the flexible arm (FA) increases the deviation of the switch(es). The force produced by the dead band spring is adjustable, and is used to offset the two contacts in the case of differential functions.

**NOTE:** The pressure switch and temperature switch scales indicated in our catalogue are values for a set point to lower the pressure or temperature.

# Construction

## TYPES OF HOUSINGS

- Standard housing: zamak, aluminium cover, epoxy paint coating
- Explosion-proof housing (RTPF): AS10G aluminium, epoxy paint coating
- Polyester housing (FPP)
- 316L/1.4404 stainless steel housing (FPX)

316 stainless steel external screws and fittings
IP 66 (IP68 available as an option)
IP 56 (IP66 available as an option) for diaphragm-actuated gauge pressure switch in FML, FMS, FMT type standard housing as per EN 60 529 (IEC 529)
External ground terminal
Plumbing is performed directly using wires for FPP and FPX type instruments and requires a specific external kit for the standard and explosion-proof models.
A stainless steel identification plate is fitted on an all polyester or stainless steel explosion-proof type instruments, and on increased safety instruments.

**Options:**
Stainless steel identification plate for standard instruments and Intrinsically safe models
Special setting range
Factory setting and plumbing
Inner graduated scale with viewing window
Respirator to limit condensation phenomena (IP 56) in standard housing
Wall mounting using M5 threads, lugs, mounting bracket or 2" mounting kit

## TYPE OF SENSING ELEMENT AND PROCESS CONNECTION

Bellows-actuated technology offers a high repeatability. It is recommended for stable processes, not subject to pulses or pressure surges. Bellows are available in bronze or 316L/1.4404 stainless steel versions.

Diaphragm-actuated technology is suitable for meeting 2 constraints:

- processes with pulsating phenomena or subject to pressure surges
- low or very low pressure control

The material used for the diaphragms will be NBR (such as Perbunan®) as standard, or FKM (such as Viton®) or Ethylene-Propylene.
The flanges will be made of 304L/1.4307 stainless steel for (D)FML and 316L stainless steel for FPA, (D)FMS, (D)FMT.

The 316L stainless steel Bourdon tube will be used for very high pressure control up to 1000 bar.

Types of connections:

- G½" as per EN ISO 228-1 as standard
- G¼" M as per EN ISO 228-1 for diaphragm-actuated pressure switches except for (D)ML model
- NPT connector as per ANSI/ASME B1.20.1

Other connector types available on request.

Depending on the type and range, the instruments may be equipped with separators with or without capillary.

## OPERATING TEMPERATURE LIMITS (PRESSURE SENSING ELEMENT)

| | | | | | | | |
|---|---|---|---|---|---|---|---|
| Bronze bellows: | -20 | to | +60°C | NBR diaphragm: | -20 | to | +100°C |
| Stainless steel bellows: | -40 | to | +150°C | EP diaphragm: | -40 | to | +120°C |
| Stainless steel tube | -40 | to | +150°C | FKM diaphragm: | +0 | to | +150°C |

## AMBIENT OPERATING TEMPERATURE LIMITS (HOUSING) STORAGE TEMPERATURE

-20 to +70°C - others on request.
For temperature switches from the C and G ranges: max. 55°C. B range: max. 50°C.

## REPRODUCIBILITY

Less than or equal to ±1% of the measurement range for constant cycle and temperature.
Greater than ±1% of the measurement range in constant cycle and temperature for FPH and FDH type sensors, for diaphragm-actuated instruments having a range of ≤40mbar and for FX range bellows-actuated sensors.

## RECOMMENDATIONS

For all F series equipment, refer to the operating and maintenance manual FU-F-EN.
For ATEX equipment, refer to the ATEX instruction manual: FI-F-EN.
These documents and the accessory data sheets are available for download from our website www.georgin.com.


GEORGIN **Dodavatel pro ČR:** o.z. MERES, HENNLICH s.r.o.● Českolipská 9, 412 01 Litoměřice
meres@hennlich.cz ● www.hennlich.cz/meres ● tel.: 416 711 203 HENNLICH

# Equipment designed for EXplosive ATmospheres (ATEX)

The tables below enable you to ascertain the product certification according to the protection index (IP66 except for FML, FMS, FMT which are IP56 unless specially requested otherwise) and the required installation area.

## INTRINSIC SAFETY

Principle: gold-plated contact for low current to be associated with an I.S. interface (see fc-rdn-fren)
Housing: standard

| | | |
|---|---|---|
| Protective enclosure | IP66 - IP68 | IP56 |
| Marking | CE 0081 Ex II 1GD Exia IIC T6 - Ex iaD 20 | CE 0081 Ex II 1G/3D Exia IIC T6 - Ex iaD 22 |
| **Installation areas** | 0 / 1 / 2 for gas groups IIA, IIB, IIC<br>20 / 21 / 22 for dust | 0 / 1 / 2 for gas groups IIA, IIB, IIC<br>22 for non-conductive dust |
| Instrument category | 1GD | 1G/3D (non-conductive dust) |
| Maximum surface temperature: 80°C — | -40°C < Operating ambient temperature < 80°C | |
| CE type examination statement<br>Type examination statement | LCIE 01 ATEX 6008X | LCIE 01 ATEX 6008X<br>LCIE 08 ATEX 6057X (voluntary statement) |

## INCREASED SAFETY

Principle: explosion-proof contact "d" - terminal block + increased safety cable gland "e"
Housing: standard or polyester "e" FPP type (off-shore application)

| | | |
|---|---|---|
| Protective enclosure | IP66 - IP68 | IP56 |
| Marking | CE 0081 Ex II 2GD Exde IIC T6 - Ex tD A 21 | CE 0081 Ex II 2G/3D Exde IIC T6 - Ex tD A 22 |
| **Installation areas** | 1 / 2 for gas groups IIA, IIB, IIC<br>21 / 22 for dust | 1 / 2 for gas groups IIA, IIB, IIC<br>22 for non-conductive dust |
| Instrument category | 2GD | 2G/3D (non-conductive dust) |
| Maximum surface temperature: 80°C — | -20°C < Operating ambient temperature < 60°C | |
| CE type examination statement<br>Type examination statement | LCIE 02 ATEX 6161X | LCIE 02 ATEX 6161X<br>LCIE 08 ATEX 6057X (voluntary statement) |

## EXPLOSION-PROOF SAFETY

Principle: explosion-proof unit "d"
Housing: RTPF type

| | |
|---|---|
| Protective enclosure | IP66 - IP68 |
| Marking | CE 0081 Ex II 2GD Exd IIC T6 - Ex tD A21 (with or without line resistors) |
| **Installation areas** | 1 / 2 for gas groups IIA, IIB, IIC<br>21 / 22 for dust |
| Instrument category | 2GD |
| Maximum surface temperature: 80°C — | -40°C < Operating ambient temperature < 80°C |
| CE type examination statement | LCIE 01 ATEX 6071X |

Caution: the use of the cable gland must comply with the standard EN 60.079-14 § 10.4 (RTPF inner volume < 2dm3)

Principle: explosion-proof contact "d" with moulded cable output
Housing: standard or polyester "e" FPP type (off-shore application)

| | | |
|---|---|---|
| Protective enclosure | IP66 - IP68 | IP56 |
| Marking | CE 0081 Ex II 2GD Exd IIC T6 - Ex tD A 21 | CE 0081 Ex II 2G/3D Exd IIC T6 - Ex tD A 22 |
| **Installation areas** | 1 / 2 for gas groups IIA, IIB, IIC<br>21 / 22 for dust | 1 / 2 for gas groups IIA, IIB, IIC<br>22 for non-conductive dust |
| Instrument category | 2GD | 2G/3D (non-conductive dust) |
| Maximum surface temperature: 80°C — | -40°C < Operating ambient temperature < 80°C | |
| CE type examination statement<br>Type examination statement | LCIE 01 ATEX 6071X | LCIE 01 ATEX 6071X<br>LCIE 08 ATEX 6057X (voluntary statement) |

## CONSTRUCTIONAL SAFETY (PNEUMATIC MODELS)

Principle: constructional safety
Housing: Standard or Polyester

| | | |
|---|---|---|
| Protective enclosure | IP66 | IP56 |
| Marking | II 2GD c IIC Tx (-20°C<Ta<60°C) IP66 T...°C | II 2G 3D c IIC Tx (-20°C<Ta<60°C) IP56 T...°C |
| **Installation areas** | 1 / 2 for gas groups IIA, IIB, IIC<br>21 / 22 for dust | 1 / 2 for gas groups IIA, IIB, IIC<br>22 for non-conductive dust |
| Instrument category | 2GD | 2G 3D |
| Technical file c | 0610 - LCIE 10 AR 046 NM | |

# Electrical or pneumatic functions

## ELECTRICAL CONTACT

The electrical contacts used by Georgin are SPDT type.
At rest, contact is established between C-NC.

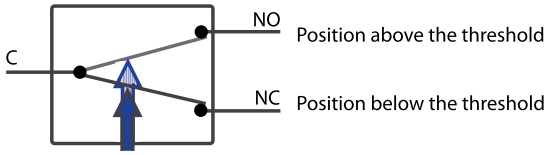


According to the type of action (opening or closure of the electrical circuit), the electrical connection is made on the terminal block between C-NC or C-NO.

## ELECTRICAL FUNCTIONS

| | | Fixed dead band [1] | Adjustable dead band [2] |
|---|---|---|---|
| 1 Change-over [1] [2] (SPDT) | Standard | 4, 4 D | 6, 6 D |
| | Tight dead band | 10, 10 D, 16, 16 D | - |
| | Nitrogen sealed | - | 96 |
| | Explosion-proof | - | 62, 62 C, 62 D |
| | Expl. pr. (tight dead band) | 60, 60 C, 60 D | - |
| 2 SPDT [3] (acting together) | Standard | - | 34, 34 D |
| | Nitrogen sealed | - | 106 |
| | Explosion-proof (Expl. pr.) | - | 162 C |
| | Expl. pr. (tight dead band) | 160 C | - |
| | | Adjustable lagging | |
| 2 SPDT [4] (two steps) | Standard | 54, 54 D | |
| | Nitrogen sealed | 116 | |
| | Explosion-proof (Expl. pr.) | 172 C | |
| | Expl. pr. (tight dead band) | 170 C | |

(1). Single fixed dead band electrical operation:
Microswitch "only". Each type of microswitch has its own characteristics, as indicated in the catalogue.
Models: 4, 4D, 10, 10D, 16, 16D, 60, 60C, etc.

(2). Single adjustable dead band electrical operation:
Microswitch combined with a dead band spring (DBS) to increase the microswitch dead band value in a given range (refer to the dead band table in the catalogue, page 10, 11, 12).
The trigger value of the upper threshold can be offset using the dead band spring DBS.
This action has no effect on the lower threshold. Models: 6, 6D, 12V, 96, 62, 62C, etc.

(3). Electrical operation with two simultaneous contacts:
Combination of two single functions set to act at the same time, either upwards or downwards. The dead band of a simultaneous function is greater than that of a single function. The synchronisation dead band at re-engagement should not be more than 1% of the mean dead band.
Fixed dead band model: 160C, etc. Adjustable dead band models: 34, 34D, 106, 162C, etc.

(4).Electrical function with two offset contacts:
Combination of two single functions adjusted to act with a gap between. The dead band spring (DBS) is used to adjust the gap between the interlocking of the switches.
Models: 54, 54D, 116, 172C, 172, 170C, 170, etc.

Remarks:
The electrical functions 60C, 62C, 160C, 162C, 170C and 172C consist of explosion-proof contacts (Ex) equipped with 1m of pre-assembled cable (3 or 5 m available as an option) which must be connected to an approved terminal block.
The electrical functions 4D/6D/34D/54D, 10D, 16D, 60D, 62D consist of gold-plated contacts, suitable for use at low levels for PLCs, and also for intrinsic safety instruments.
The contacts 4, 6, 34, 54 are tropicalised as standard.


GEORGIN **Dodavatel pro ČR:** o.z. MERES, HENNLICH s.r.o.● Českolipská 9, 412 01 Litoměřice
meres@hennlich.cz ● www.hennlich.cz/meres ● tel.: 416 711 203 HENNLICH

Maximum breaking capacity (resistive load)

| Contact No. | AC | | DC | |
|---|---|---|---|---|
| 4/6/34/54 | 10A | 240V | 0.5A | 110V |
| 10 | 5A | 240V | 0.5A | 130V |
| 16 | 2A | 240V | 1A | 130V |
| 96/106/116 | 2.5A | 240V | 1A | 130V |
| 4D/6D/34D/54D | - | - | 1mA/100mA | 4V/30V |
| 10D | - | - | 50mA | 30V |
| 16D/60D/62D | - | - | 10mA / 100mA | 6V / 24V |
| 62/62C/162C/172C | 5A | 240V | 0.4A | 250V |
| 60/60C/160C/170C | 7A | 240V | 0.25A | 250V |
| 12V | 10A | 240V | - | - |

## Cable inlets

The instruments (with the exception of polyester, stainless steel housings & explosion-proof housing) have one M16 type cable inlet and are supplied with 1 or 2 cable glands 5 to 10 mm in diameter (standard and I.S. instrument). The instrument can also be supplied without cable inlets.

Explosion-proof housings are supplied as standard with a 3/4"NPT type cable inlet.
Cable glands are available as an option. The choice of cable gland directly affects the certification, and could lead to the equipment being declassified. Refer to the ATEX instruction sheet.

Polyester housings (FPP) are equipped as standard with an ISO M20-certified Ex ed cable gland 6 to 13 mm in diameter (Ex de instrument).

Stainless steel housings (FPX) are equipped as standard with an ISO M20-certified stainless steel cable gland 6 to 13 mm in diameter.

Other cable gland models are available on request.

## Internal terminal blocks

The terminal blocks are designed for the following maximum wire size: 2.5 mm² for standard models and 1.5 mm² for ATEX models.

## PNEUMATIC FUNCTION

The instruments can be equipped with one or more Normally Open (NO) or Normally Closed (NC) pneumatic functions using a spool or poppet valve.

Georgin offers single, simultaneous double, and offset double pneumatic functions.
The supply fittings are M5, 1/4, or 1/8 gas threaded according to the type of function and/or the model.
According to the type of cell, the control pressure will be:

- As standard: 1.5 to 8 bar (spool design <> with a residual leak).
- On request for NC cell: 0 to 10 bar (poppet design <> without leak).

The control fluid must be compatible with the ISO-VG 10 standard (air, nitrogen, etc.).
Maximum allowable filtration 5 µm.
The standard materials for the cell body are polyamide, brass, and/or aluminium. The seals are made of NBR (other types on request).

For certain models, exhaust is via open cable gland or screw terminal (mandatory for ATEX models).
The control pressure applied to the unit affects the dead band: the lower the supply pressure, the smaller the dead band, and vice-versa.

At rest, the pneumatic function is set as follows:

**P**: Power supply

**U**: Use

**E**: Exhaust

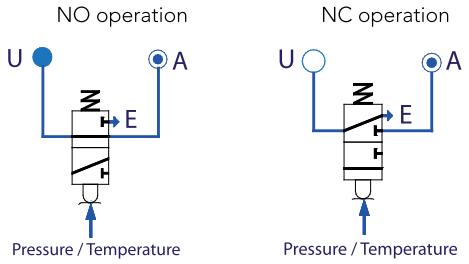


| Pneumatic function type | Reference |
|---|---|
| normally open | NO |
| normally closed | NC |
| change over | IP |
| double NO and NC with adjustable lagging | OC |
| double NC and NO with adjustable lagging | CO |
| double NO+NO with adjustable lagging | DO |
| double NC+NC with adjustable lagging | DC |
| double simultaneous fixed dead band NO+NO | SO |
| Double simultaneous fixed dead band NC+NC function | SC |
| Double simultaneous fixed dead band NO+NC function | SN |

# Code numbers

| FP | | 6 |
|---|---|---|

| Instrument type (pages 4, 10, 11, 12) | |
|---|---|
| FV | Bellows-actuated absolute pressure switch |
| FML<br>FMS<br>FMT<br>FPA (S) | Diaphragm-actuated gauge pressure switch |
| FP<br>FPH | Bellows-actuated gauge pressure switch |
| FPL | Bourdon tube gauge pressure switch |
| DFML<br>DFMS<br>DFMT | Diaphragm-actuated differential pressure switch |
| FD<br>FDH | Bellows-actuated differential pressure switch |
| FB<br>FBA | Direct bulb temperature switch |
| FC | Bulb and capillary temperature switch |

| Specific features | |
|---|---|
| | Standard housing |
| P | Polyester housing.<br><br>Can only be associated with the electrical functions 60(C), 62(C), 160(C), 162(C), 170(C), 172(C) |
| X | Stainless steel housing |

| Function type (pages 6 and 7) | |
|---|---|
| 4 / 4D<br>10 / 10D<br>16 / 16D<br>60 / 60C | Single electrical function with fixed dead band |
| 6 / 6D<br>96<br>62 / 62C | Single electrical function with adjustable dead band |
| 160C | Electrical function with 2 simultaneous contacts with fixed dead band* |
| 34 / 34D<br>106<br>162C | Electrical function with 2 simultaneous contacts with adjustable dead band* |
| 54 / 54D<br>54V<br>116<br>172C<br>170C | Electrical function with 2 offset contacts |
| NO / NC<br>IP<br>OC / CO<br>DO / DC<br>SO / SC<br>SN | Pneumatic function |

* refer §(3) page 6

Georgin has one of the most extensive ranges of electromechanical and electropneumatic security solutions in the world.

Because our product range is subject to ongoing development and so as not to impact the safety of your installations, this document enables you to define your overall reference. We will confirm this with our item code.

Examples of code numbers

| | | | | |
|---|---|---|---|---|
| FPAS | | 4 | P | |
| FC | P | 160C | R2X | |
| DFML | | 54 | BX | RTPF |
| FP | X | 6 | RX | |

Diaphragm-actuated gauge pressure switch (material to be defined) and galvanised steel flange
Standard housing
With fixed dead band electrical operation
Range: 0.5..10bar // Pmax: 200bar

Stainless steel bulb and capillary temperature switch
Polyester housing and electrical output via cable
With fixed dead band electrical operation with two simultaneous contacts
Range: 65..170°C

Diaphragm-actuated differential pressure switch (material to be defined) and stainless steel flange
Explosion-proof housing
With electrical operation with two offset contacts
Range: 0..20mbar

Stainless steel bellows-actuated pressure switch
Stainless steel housing
With single adjustable dead band electrical operation
Range: 5..50bar
Pmax: 200bar


**Dodavatel pro ČR:** o.z. MERES, HENNLICH s.r.o.● Českolipská 9, 412 01 Litoměřice
meres@hennlich.cz ● www.hennlich.cz/meres ● tel.: 416 711 203

**PX** **RTPF**

## Range and qualification of metal parts in contact with fluid

The range information is detailed in the next 3 pages.

The information "X" denotes, according to the type of instrument, that the connector, bellows, Bourdon tube and the flange of the diaphragm-actuated instrument or the the thermostatic element are made of stainless steel.

In addition to the reference, we request you to specify for a pressure switch:
- The type of connector (1/2"GM, ¼"NPTF, mounting on separator, etc.)
- The diaphragm material if applicable (NBR, FKM or E.P.)

If a treatment such as degreasing, passivation or a helium test is to be envisaged, please specify this.

For a temperature switch:
- The type of bulb
- Its dimensions

and if applicable, the type of capillary, its length and protection.

## Specific features

| | |
|---|---|
| | Standard housing |
| **RTPF** | Explosion-proof housing<br><br>Cannot be associated with the electrical functions 60(C), 62(C), 160C, 162C, 170C, 172C |

## DEAD BAND TABLE READING GUIDE

*Applicable to tables on pages 10/11/12*
*Example on FP. P(X) type pressure switch*

FP. P(X) denotes an F series gauge pressure switch.

The sensing element of the FP. P is made of bronze and offers a continuous Pmaximum of 13 bar. For a FP. PX stainless steel bellows-actuated switch, the maximum pressure is 15 bar. Its setting range is 0.5 to 10 bar for a **pressure lowering set point**. Please note that the setting range for a pressure increasing set point is dependent on the associated microswitch.

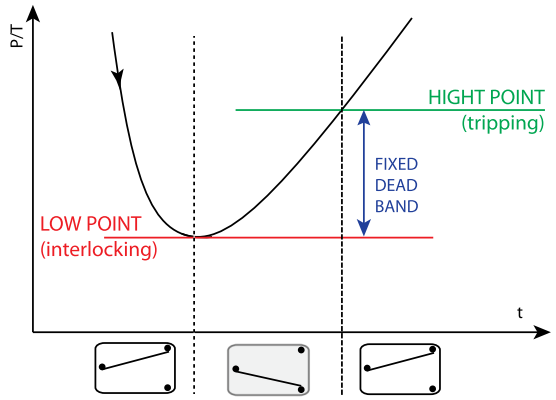


Example of set point to lower P/T

| Type | Range | 1 SPDT | | | | | | | | | Max. dead band ≤ | P max |
|---|---|---|---|---|---|---|---|---|---|---|---|---|
| | | fixed dead band ≤ | | | | adjustable dead band ≤ | | | | | | |
| | | 4 | 10 | 16 | 60 | 6 | 62 | 96 | 34 | 106 | | |
| | bar | mbar | | | | | | | | | bar | |
| FP. P (X) | 0.5 to 10 | 285 | 55 | 30 | 140 | 285 | 450 | 400 | 335 | 650 | 2 | 13 (15) |

READ AS FOLLOWS

- Fixed dead band electrical operation

| | 4 / 4D | 10 / 10D | 16 / 16D | 60 / 60C |
|---|---|---|---|---|
| fixed dead band | 285 mbar | 55 mbar | 30 mbar | 140 mbar |

- Adjustable dead band electrical operation

| | 6/6D | 62 / 62C | 96 |
|---|---|---|---|
| min dead band | 285 mbar | 450 mbar | 400 mbar |
| max dead band | 2 bar | | |

- Electrical operation with two simultaneous contacts

| | 34 / 34D | 160C | 162C | 106 |
|---|---|---|---|---|
| min dead band | 335 mbar | ~ dead band of function 60 x1.5 | ~ min dead band of function 62 x1.5 | ~ 650 mbar |
| max dead band | 2 bar | N.A. (fixed dead band) | 2bar | |

- Electrical operation with two offset contacts

| | 54 / 54D | 170C | 172C | 116 |
|---|---|---|---|---|
| 1st microswitch | ~ 285 mbar - min dead band of function 4 | ~min dead band of function 60 | ~ min dead band of function 62 | ~ 650 mbar |
| Regardless of the double offset electrical function, the dead band between the first increasing set point and the second lowering set point must be within the setting range equivalent to the rangeability offered by function 6, i.e. between 285mbar and 2bar. Otherwise, please consult us. | | | | |
| 2nd microswitch | ~ dead band of function 4 x1.5 | ~ dead band of function 60 x1.5 | ~ min dead band of function 62 x1.5 | ~ dead band of function 96 x1.5 |

# Gauge pressure switches: ranges and dead bands

## DIAPHRAGM-ACTUATED GAUGE PRESSURE SWITCHES

| Type | Range | 1 SPDT | | | | | | | | | | | | | | 2 SPDT | | | | Max. dead band ≥ | P max |
|---|---|---|---|---|---|---|---|---|---|---|---|---|---|---|---|---|---|---|---|---|---|
| | | fixed dead band ≤ | | | | | | | | adjustable dead band ≤ | | | | | | | | | | | |
| | | 4 | | 10 | | 16 | | 60 | | 6 | | 62 | | 96 | | 34 | | 106 | | | |
| | mbar | mbar | | | | | | | | | | | | | | | | | | mbar | bar |
| | | L | H | L | H | L | H | L | H | L | H | L | H | L | H | L | H | L | H | | |
| FML.B (X) | 0 to 20 | 2.7 | 3.5 | 0.8 | 1.1 | 0.4 | 0.5 | 1.6 | 2.2 | 2.7 | 3.5 | 5 | 7 | 3.0 | 4.0 | 3.2 | 4.2 | - | - | 20 | +/-0.3 |
| FML.C (X) | 0 to 40 | 3 | 4 | 0.9 | 1.2 | 0.5 | 0.6 | 1.8 | 2.4 | 3 | 4 | 5.5 | 7.5 | 3.5 | 4.5 | 3.7 | 4.7 | - | - | 20 | +/-0.3 |
| FML.D (X) | -50 to 10 | 4 | 5 | 1.1 | 1.4 | 0.6 | 0.9 | 2.2 | 2.8 | 4 | 5 | 7 | 9 | 4.5 | 5.5 | 4.8 | 6.2 | - | - | 20 | +/-0.3 |
| FML.H (X) | 0 to 80 | 3.5 | 4.5 | 1.3 | 1.8 | 0.5 | 0.7 | 2.6 | 2.6 | 3.5 | 4.5 | 6.5 | 8 | 4.0 | 5 | 4.2 | 5.5 | - | - | 20 | +/-0.3 |
| FMS ● JX | 0 to 500 | 52 | 63 | 10 | 12 | 4 | 5 | 20 | 24 | 52 | 63 | 75 | 95 | 50 | 70 | 60 | 70 | 80 | 95 | 200 | 80 |
| FMS.MX | 0 to 1000 | 60 | 70 | 11 | 15 | 5 | 6 | 22 | 28 | 60 | 70 | 80 | 105 | 55 | 75 | 65 | 80 | 85 | 105 | 200 | 80 |
| FMT.F (X) | 10 to 250 | 25 | 32 | 5 | 6 | 2 | 2.5 | 10 | 12 | 25 | 32 | 37 | 50 | 25 | 35 | 30 | 35 | 40 | 50 | 100 | 200 |
| FMT.G (X) | 10 to 500 | 28 | 35 | 5.5 | 7.5 | 2.5 | 3 | 11 | 14 | 28 | 35 | 45 | 55 | 30 | 40 | 35 | 40 | 45 | 55 | 100 | 200 |
| | bar | Pulses or transient pressure surge | | | | | | | | | | | | | | | | | | bar | |
| FPA.K (X) | -1 to 5 | 160 | 240 | 30 | 45 | 16 | 24 | 70 | 105 | 160 | 240 | 200 | 300 | 170 | 260 | 200 | 300 | 270 | 400 | 1 | ● 80 |
| FPA.P (X) | ▲ 0.5 to 10 | 275 | 480 | 50 | 75 | 30 | 45 | 120 | 185 | 275 | 480 | 350 | 560 | 400 | 500 | 320 | 520 | 500 | 750 | 2 | ● 80 |
| FPA.Q (X) | 2.5 to 25 | 700 | 980 | 120 | 175 | 60 | 90 | 300 | 400 | 700 | 980 | 810 | 1200 | 750 | 1050 | 750 | 1100 | 1100 | 1600 | 5 | ● 80 |
| FPA.R (X) | 5 to 50 | 2100 | 5800 | 500 | 1400 | 200 | 400 | 750 | 2200 | 2100 | 5800 | 2500 | 7500 | 2200 | 4000 | 2300 | 5800 | 3500 | 5500 | 10 | ● 80 |

● 200 bar version available - Code changes to FPAS
▲ For P (X) range pressure switches equipped with change-overs 96 or 106, the range becomes: 1 to 10 bar
The "L" and "H" columns give the min dead bands for set points in the Lowest or Highest part of the range.

## BELLOWS-ACTUATED GAUGE PRESSURE SWITCHES

| Type | Range | 1 SPDT | | | | | | | 2 SPDT | | Max. dead band ≥ | P max |
|---|---|---|---|---|---|---|---|---|---|---|---|---|
| | | fixed dead band ≤ | | | | adjustable dead band ≤ | | | | | | |
| | | 4 | 10 | 16 | 60 | 6 | 62 | 96 | 34 | 106 | | |
| | bar | mbar | | | | | | | | | bar | |
| FP.AX | -1 to 0 | 35 | 7.5 | 4 | 17 | 35 | 54 | 45 | 40 | 70 | 0.25 | 2 |
| FP.FX | ■ 0 to 0.25 | 18 | 4 | 3.2 | 14 | 18 | 34 | 35 | 24 | 60 | 0.25 | 2 |
| FP.GX | ■ 0 to 0.5 | 21 | 5 | 3.3 | 15 | 21 | 37 | 37 | 27 | 62 | 0.25 | 2 |
| FP.MX | ■ 0 to 1 | 26 | 5.5 | 3.5 | 15 | 26 | 45 | 40 | 32 | 65 | 0.25 | 2 |
| FP.LX | -1 to 1 | 75 | 15.5 | 7 | 35 | 75 | 115 | 85 | 85 | 130 | 0.5 | ■ 8 |
| FP.NX | ◆ 0.1 to 2 | 55 | 11.5 | 6 | 30 | 55 | 85 | 70 | 65 | 125 | 0.5 | ■ 8 |
| FP.K (X) | -1 to 5 | 205 | 40 | 20 | 90 | 205 | 310 | 250 | 225 | 380 | 1 | 13 (15) |
| FP.P (X) | ▲ 0.5 to 10 | 285 | 55 | 30 | 140 | 285 | 450 | 400 | 335 | 650 | 2 | 13 (15) |
| FP.QX | 2.5 to 25 | 700 | 140 | 70 | 305 | 700 | 1100 | 800 | 800 | 1300 | 5 | 30 |
| FP.RX | 5 to 50 | 1600 | 320 | 150 | 700 | 1600 | 2400 | 1800 | 1750 | 2800 | 10 | 80 |
| FP.SX | 10 to 125 | 5200 | 1000 | 400 | 2000 | 5200 | 7700 | 5000 | 5600 | 7500 | 20 | 250 |
| FPH.GX | ● 0 to 0.5 | 40 | 9 | ● 6 | 26 | 40 | 70 | 70 | 50 | 55 | 0.5 | ■ 8 |
| FPH.KX | -0.5 to 6 | 550 | 140 | 40 | 190 | 550 | 750 | 500 | 600 | 500 | 1.5 | 30 |
| FPH.PX | 1 to 10 | 600 | 150 | 40 | 200 | 600 | 800 | 550 | 650 | 700 | 1.5 | 30 |

● for autoclaves
▲ For pressure switches equipped with SPDT 96, 106 or 116, the bottom of the range is: 1 bar
■ For pressure switches equipped with SPDT 96, 106 or 116, the bottom of the range is: 0.05 bar
◆ For pressure switches equipped with SPDT 96, 106 or 116, the bottom of the range is: 0.2 bar
● For pressure switches equipped with SPDT 96, 106 or 116, the bottom of the range is: 0.05 bar
■ For RPTF type pressure switches, the maximum pressure will be limited to 7 bar

## BOURDON TUBE PRESSURE SWITCHES

| Type | Range | 1 SPDT | | | | | | | 2 SPDT | | Max. dead band ≥ | P max |
|---|---|---|---|---|---|---|---|---|---|---|---|---|
| | | fixed dead band ≤ | | | | adjustable dead band ≤ | | | | | | |
| | | 4 | 10 | 16 | 60 | 6 | 62 | 96 | 34 | 106 | | |
| | bar | bar | | | | | | | | | bar | |
| FPL.TX | 10 to 200 | 18 | 4 | 1.6 | 7.5 | 18 | 28 | 19 | 20 | 30 | 100 | 300 |
| FPL.VX | 25 to 400 | 36 | 8 | 3.2 | 15.5 | 36 | 57 | 40 | 45 | 60 | 200 | 600 |
| FPL.YX | 50 to 800 | 72 | 16 | 6.4 | 31 | 72 | 114 | 80 | 90 | 120 | 250 | 1000 |


GEORGIN
**Dodavatel pro ČR:** o.z. MERES, HENNLICH s.r.o.● Českolipská 9, 412 01 Litoměřice
meres@hennlich.cz ● www.hennlich.cz/meres ● tel.: 416 711 203
HENNLICH

# Absolute and differential pressure switches: ranges and dead bands

## BELLOWS-ACTUATED ABSOLUTE PRESSURE SWITCHES

| Type | Range (absolute) | 1 SPDT | | | | | | | 2 SPDT | | Max. dead band ≥ | P max |
|---|---|---|---|---|---|---|---|---|---|---|---|---|
| | | fixed dead band ≤ | | | | adjustable dead band ≤ | | | | | | |
| | | 4 | 10 | 16 | 60 | 6 | 62 | 96 | 34 | 106 | | |
| | bar | mbar | | | | | | | | | | bar |
| FV.HX | 0.05 to 1 | 45 | 12 | 5 | 22 | 45 | 65 | 55 | 50 | 85 | 0.25 | 3 |
| FV.NX | 0.1 to 2 | 100 | 30 | 10 | 115 | 100 | 160 | 120 | 110 | 170 | 0.5 | ◆ 9 |
| FV.M (X) | 0.2 to 6 | 300 | 60 | 25 | 255 | 300 | 450 | 300 | 320 | 410 | 1 | 14 |

◆ For RPTF type pressure switches, the maximum pressure will be limited to 8 bar absolute

## DIAPHRAGM-ACTUATED DIFFERENTIAL PRESSURE SWITCHES

| Type | Range ΔP | 1 SPDT | | | | | | | | | | | | | | 2 SPDT | | | | Max. dead band ≥ | Stat. P min/max (operating) |
|---|---|---|---|---|---|---|---|---|---|---|---|---|---|---|---|---|---|---|---|---|---|
| | | fixed dead band ≤ | | | | | | | | adjustable dead band ≤ | | | | | | | | | | | |
| | | 4 | | 10 | | 16 | | 60 | | 6 | | 62 | | 96 | | 34 | | 106 | | | |
| | mbar | mbar | | | | | | | | | | | | | | | | | | mbar | bar |
| | | L | H | L | H | L | H | L | H | L | H | L | H | L | H | L | H | L | H | | |
| DFML.B (X) | 0 to 20 | 3.0 | 4.0 | 0.9 | 1.2 | 0.5 | 0.6 | 1.8 | 2.4 | 3.0 | 4.0 | 5.5 | 7.5 | 3.5 | 4.5 | 3.6 | 4.7 | - | - | 20 | -0.3/0.3 |
| DFML.C (X) | 0 to 40 | 3.5 | 4.4 | 1 | 1.3 | 0.6 | 0.7 | 2 | 2.6 | 3.5 | 4.4 | 6 | 8.5 | 4 | 5 | 4.2 | 5.3 | - | - | 20 | -0.3/0.3 |
| DFML.H (X) | 0 to 80 | 4.0 | 5.2 | 1.1 | 1.4 | 0.6 | 0.8 | 2.2 | 2.8 | 4.0 | 5.2 | 7 | 9 | 4.5 | 5.5 | 4.8 | 6.2 | - | - | 20 | -0.3/0.3 |
| DFMS.JX | 50 to 500 | 75 | 90 | 15 | 18 | 5.5 | 6.5 | 28 | 32 | 75 | 90 | 110 | 135 | 70 | 85 | 80 | 100 | 95 | 115 | 200 | P.atm/80 |
| DFMS.MX | 50 to 1000 | 80 | 100 | 18 | 22 | 6 | 7.5 | 30 | 36 | 80 | 100 | 115 | 155 | 75 | 95 | 85 | 110 | 100 | 130 | 200 | P.atm/80 |
| DFMT.F (X) | 10 to 250 | 35 | 45 | 7.5 | 9 | 3 | 3.5 | 14 | 16 | 35 | 45 | 55 | 70 | 35 | 45 | 40 | 50 | 50 | 60 | 100 | P.atm/200 |
| DFMT.G (X) | 10 to 500 | 40 | 50 | 9 | 11 | 3 | 4 | 15 | 18 | 40 | 50 | 60 | 80 | 40 | 50 | 45 | 55 | 55 | 65 | 100 | P.atm/200 |

## BELLOWS-ACTUATED DIFFERENTIAL PRESSURE SWITCHES

| Type | Range ΔP | 1 SPDT | | | | | | | 2 SPDT | | Max. dead band ≥ | Stat. P min/max (operating) |
|---|---|---|---|---|---|---|---|---|---|---|---|---|
| | | fixed dead band ≤ | | | | adjustable dead band ≤ | | | | | | |
| | | 4 | 10 | 16 | 60 | 6 | 62 | 96 | 34 | 106 | | |
| | bar | mbar | | | | | | | | | | bar |
| FD.HX | 0.05 to 1 | 45 | 12 | 5 | 25 | 45 | 70 | 60 | 50 | 85 | 0.25 | -1/2 |
| FD.NX | 0.1 to 2 | 100 | 30 | 10 | 45 | 100 | 160 | 120 | 110 | 170 | 0.5 | -1/8 ■ |
| FD.MX | 0.2 to 5 | 300 | 65 | 25 | 120 | 300 | 450 | 330 | 320 | 450 | 1 | -1/15 |
| FD.P (X) | 0.5 to 10 | 410 | 85 | 35 | 165 | 410 | 625 | 430 | 450 | 700 | 2 | 0.5/13 (15) |
| FD.QX | 1 to 20 | 1100 | 240 | 85 | 420 | 1100 | 1650 | 1150 | 1200 | 1600 | 5 | 2.5/30 |
| FD.RX | 2.5 to 50 | 2500 | 550 | 190 | 950 | 2500 | 3700 | 2600 | 2600 | 3500 | 10 | 5/80 |
| FD.SX | 5 to 100 | 8600 | 1800 | 550 | 2700 | 8600 | 12600 | 7000 | 9000 | 10000 | 20 | 10/250 |
| FDH.GX | 0.05 to 0.5 | 90 | 24 | 9 | 44 | 90 | 140 | 110 | 100 | 150 | 0.5 | 0/8 ■ |
| FDH.NX | 0.4 to 2 | 900 | 180 | 50 | 280 | 900 | 1350 | 750 | 950 | 950 | 1.5 | 2.5/30 |
| FDH.PX | 0.5 to 10 | 1000 | 200 | 80 | 400 | 1000 | 1500 | 950 | 1100 | 1500 | 5 | 2.5/30 |
| FDH.QX | 1 to 20 | 2300 | 510 | 186 | 940 | 2300 | 3400 | 2400 | 2450 | 3400 | 10 | 5/80 |

■ For RPTF type pressure switches, the maximum static pressure will be limited to 7 bar

**Remarks:**
The "L" and "H" columns give the minimum dead band values for the Lowest and Highest set point of the range, for a pressure variation of 5% of the measurement range per minute.
The max dead bands correspond to the adjustable dead band electrical codes.
For an explosion-proof housing, the min dead bands should be multiplied by 1.5.

### Important remark for proper differential pressure switch operation

To ensure that the contact(s) will change state, the pressure in the HP chamber must be greater than that in the LP chamber. This difference must be greater than the sum of differential pressure (ΔP) + microswitch dead band.

$$HP - LP > \Delta P + e$$

| Type | Range ΔP | Adjustable dead band ≤ 1x SPDT 96 | Max. dead band ≥ | Max. static P Min / Max |
|---|---|---|---|---|
| | bar | bar | bar | bar |
| FD.PX | 0.5 to 10 | 0.43 | 2 | 0.5 / 13 |

**Example:**
For an FD.PX in function 96, the pressure in the HP chamber must be greater than the pressure in the LP chamber by at least:
P.HP - P.LP > 0.5 + 0.43 bar
P.HP - P.LP > 0.93 bar

# Temperature switches: ranges and dead bands

## DIRECT BULB TEMPERATURE SWITCHES (VAPOUR PRESSURE)

As standard, the dimensions of FB bulbs are Ø 14 x 120 mm, and 14 x 40 mm for FBA bulbs

| Type | Range | 1 SPDT | | | | | | | | | | | | | | 2 SPDT | | | | Max. dead band ≥ | | T max |
|---|---|---|---|---|---|---|---|---|---|---|---|---|---|---|---|---|---|---|---|---|---|---|
| | | fixed dead band ≤ | | | | | | | | adjustable dead band ≤ | | | | | | | | | | | | |
| | | 4 | | 10 | | 16 | | 60 | | 6 | | 62 | | 96 | | 34 | | 106 | | | | |
| | °C | °C | | | | | | | | | | | | | | | | | | °C | | |
| | | L | H | L | H | L | H | L | H | L | H | L | H | L | H | L | H | L | H | L | H | |
| FB.G | -20 to 45 | 5 | 1.0 | 1 | 0.2 | 0.6 | 0.1 | 2.5 | 0.6 | 5 | 1.0 | 7 | 1.6 | 6 | 1.5 | 5.4 | 1.2 | 10 | 2.5 | 20 | 7 | 55 |
| FB.P | 20 to 95 | 5.5 | 1.2 | 1 | 0.3 | 0.8 | 0.2 | 3 | 0.7 | 5.5 | 1.2 | 8 | 1.9 | 7 | 2 | 6.4 | 1.4 | 12 | 3 | 25 | 8 | 105 |
| FB.R | 45 to 120 | 6 | 1.4 | 1.2 | 0.3 | 0.8 | 0.2 | 3 | 0.7 | 6 | 1.4 | 10 | 2.3 | 7.5 | 2 | 6.5 | 1.6 | 13 | 3 | 25 | 8 | 135 |
| Special ambient temperature switches | | | | | | | | | | | | | | | | | | | | | | |
| FBA.GX | -20 to 45 | 5 | 1.0 | 1 | 0.2 | 0.6 | 0.1 | 2.5 | 0.6 | 5 | 1.0 | 7 | 1.6 | 6 | 1.5 | 5 | 1.0 | 10 | 2.5 | 20 | 7 | 55 |
| ● FBA.PX | 20 to 70 | 5.5 | 1.9 | 1 | 0.5 | 0.8 | 0.3 | 3 | 1 | 5.5 | 1.9 | 8 | 3.0 | 7 | 2.8 | 5.5 | 4.5 | 12 | 4.5 | 25 | 10 | 70 |

● The temperature ranges being given to lower the temperature, the set point selected should not be greater than the max temperature.

## BULB AND CAPILLARY TEMPERATURE SWITCHES (VAPOUR PRESSURE)

Differential versions of the temperature switches are also available

| Type | Range | 1 SPDT | | | | | | | | | | | | | | 2 SPDT | | | | Max. dead band ≥ | | T max ▲ |
|---|---|---|---|---|---|---|---|---|---|---|---|---|---|---|---|---|---|---|---|---|---|---|
| | | fixed dead band ≤ | | | | | | | | adjustable dead band ≤ | | | | | | | | | | | | |
| | | 4 | | 10 | | 16 | | 60 | | 6 | | 62 | | 96 | | 34 | | 106 | | | | |
| | °C | °C | | | | | | | | | | | | | | | | | | °C | | |
| | | L | H | L | H | L | H | L | H | L | H | L | H | L | H | L | H | L | H | L | H | |
| FC.B (X) | -90 to -30 | 6.5 | 1.0 | 1.5 | 0.3 | 1.2 | 0.2 | 3.5 | 0.5 | 6.5 | 1.0 | 10 | 1.3 | 9 | 1.3 | 7.5 | 1.1 | 16 | 2.2 | 25 | 5 | 50 |
| FC.C (X) | -50 to 10 | 11 | 1.8 | 1.8 | 0.5 | 0.7 | 0.2 | 3.2 | 8 | 11 | 1.8 | 15.5 | 2.7 | 8 | 2 | 13 | 2.2 | 10 | 2.5 | 20 | 5 | 55 |
| FC.G (X) | -20 to 45 | 5 | 1.0 | 1.2 | 0.2 | 0.6 | 0.1 | 2.5 | 0.6 | 5 | 1.0 | 7 | 1.6 | 6 | 1.5 | 5.4 | 1.2 | 10 | 2.5 | 20 | 7 | 55 |
| FC.P (X) | 20 to 95 | 5.5 | 1.2 | 1.2 | 0.3 | 0.8 | 0.2 | 3.2 | 0.7 | 5.5 | 1.2 | 8 | 1.9 | 7 | 2.2 | 6.4 | 1.4 | 12 | 3.2 | 25 | 8 | 105 |
| FC.R (X) | 45 to 120 | 6 | 1.4 | 1.2 | 0.3 | 0.8 | 0.2 | 3.2 | 0.7 | 6 | 1.4 | 10 | 2.3 | 7.5 | 2.2 | 6.5 | 1.6 | 13 | 3. | 25 | 8 | 135 |
| FC.R2 (X) | 65 to 170 | 9 | 2.0 | 2.2 | 0.5 | 1.6 | 0.3 | 4.2 | 0.9 | 9 | 2.0 | 14 | 2.8 | 12.5 | 2.6 | 10 | 2.2 | 17 | 4 | 40 | 12 | 180 |
| FC.T (X) | 115 to 210 | 7 | 1.6 | 1.2 | 0.4 | 0.8 | 0.3 | 3.2 | 1 | 7 | 1.6 | 10 | 2.5 | 7 | 2.5 | 8 | 2.0 | 12 | 4. | 25 | 8 | 225 |
| FC.V (X) | 150 to 250 | 7.5 | 1.8 | 1.5 | 0.4 | 0.8 | 0.3 | 3.5 | 1 | 7.5 | 1.8 | 11 | 2.5 | 8.5 | 2.5 | 9 | 2.1 | 15 | 4 | 35 | 10 | 265 |
| FC.V2 (X) | 180 to 300 | 11 | 2.8 | 2.5 | 0.6 | 1.8 | 0.4 | 5 | 1.2 | 11 | 2.8 | 16 | 4.0 | 13.5 | 3.5 | 12 | 3.0 | 20 | 5.5 | 45 | 15 | 320 |
| ■ FC.WX | 230 to 380 | 18 | 2.5 | 4.2 | 0.6 | 3 | 0.4 | 10 | 1.5 | 18 | 2.5 | 25 | 4.0 | 25 | 3.5 | 21 | 3.0 | 34 | 5.5 | 50 | 16 | 400 |

■ At ambient temperatures <+6°C, the instrument is no longer operational: it will resume normal operation without any damage once the temperature has exceeded +6°C (FC . WX only).

▲ On request, these max temperatures can be increased with special ranges. Install probes vertically (capillary output up) or inclined to an angle of 45°. Up to an angle of 75°, please consider the inherent restrictions in respect of the ambient and operating temperatures. For any installations with an angle greater than 75°, please consult us beforehand.

**Remarks:**

The "L" and "H" columns give the minimum dead band values for the Lowest and Highest set point of the range, for a temperature variation of 0.5°/minute.
The max dead bands correspond to the adjustable dead band electrical functions.
For an explosion-proof housing, the min dead bands should be multiplied by 1.5.
These values correspond to the optimum and repeated test conditions for a bulb fully immersed without an immersion pocket in a thermostatic bath of which the type and stirring ensure a precise and homogeneous temperature.

## BULB DESIGN AND CAPILLARY LENGTH

| T. amb.°C | -20 to 5 | 5 to 35 | 35 to 70 | -20 to 5 | 5 to 35 | 35 to 70 | -20 to 5 | 5 to 35 | 35 to 70 | -20 to 5 | 5 to 35 | 35 to 70 |
|---|---|---|---|---|---|---|---|---|---|---|---|---|
| Bulb | Ø 9 x 120mm | | | Ø 10 x 150mm | | | Ø 14 x 150mm | | | Ø 14 x 236mm | | |
| Type | ◆ ALLOWABLE CAPILLARY LENGTH (METRES) | | | | | | | | | | | |
| FC.B (X) | 2 | | | 2 | | | 2 to 6 | | | 2 to 16 | | |
| FC.C (X) | - | | | - | | | | | | | | |
| FC.G (X) | 2 | | | | | | | | | | | |
| FC.P (X) | 2 to 6 | | | 2 to 20 | | | 2 to 20 | | | 2 to 20 | | |
| FC.R (X) | | | | | | | | | | | | |
| FC.T (X) | | | | | | | | | | | | |
| FC.V (X) | | | | | | | | | | | | |
| FC.WX | | | | | | | | | | | | |

◆ Standard capillary length: 2 metres; other lengths on request

Standard bulb: Ø14 x 150mm stainless steel, Ø10 x 150mm copper (except for ranges around ambient operating temp: Ø14 x 150mm).



GEORGIN **Dodavatel pro ČR:** o.z. MERES, HENNLICH s.r.o.● Českolipská 9, 412 01 Litoměřice
meres@hennlich.cz ● www.hennlich.cz/meres ● tel.: 416 711 203 HENNLICH

# Specific features associated with mounting temperature switches

## Important remark on probe installation

Thermostatic probes must be installed facing down, with the capillary outlet at the top.
The measurement probe must not be placed in a horizontal position. The position of the probe can affect the operation of the temperature switch. This type of probe is intended for vertical use, and is placed lower than the housing.
Any deviation from these conditions can affect the response time and operation of the device.
By design, our temperature switches are filled to allow probe inclination of 45° without affecting operation. Beyond this value, operation is dependent on the temperature value measured in relation to ambient temperature.

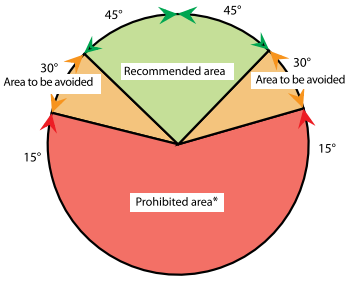


Recommended area: ±45° either side of the vertical axis, bulb down (capillary output up).

Area to be avoided: From 45° to 75°, the operation of the sensor depends on the measured temperature value (Ts) and the ambient temperature (Ta):
Ta > Ts: operation is not affected,
Ta < Ts: operation might be affected,
Ta = Ts: operation is affected.

Prohibited area: Beyond 75°, the operation of the sensor can be significantly affected. This is difficult to predict and depends on several physical parameters. Technical solutions are possible on request (please consult us).

## IMMERSION POCKETS (MECHANICALLY WELDED) WITH CAPILLARY CABLE GLAND

| For bulb (mm) | A (mm) | B (mm) | C (mm) | D hex w/o flats | E conical | F (mm) | Reference | |
|---|---|---|---|---|---|---|---|---|
| | | | | | | | Brass | 316L stainless steel |
| 9 x 120 | 115 | 16 | 16 | 26 | G ½" | 12 | GC41 | GCX41 |
| 10 x 150 | 145 | 22 | 22 | 29 | G ¾" | ◆ 13 | GC1 | GCX1 |
| 10 x 150 | 145 | 22 | 22 | 29 | G ½" | ◆ 13 | GC11 | GCX11 |
| ▲ 14 x 120 | 105 | 22 | 22 | 29 | G ¾" | 17 | GB21 | GBX21 |
| 14 x 150 | 145 | 22 | 22 | 29 | G ¾" | 17 | GC21 | GCX21 |
| ▲ 14 x 120 | 105 | 22 | 22 | 29 | G ½" | 17 | - | GBX61 |
| 14 x 150 | 145 | 22 | 22 | 29 | G ½" | 17 | - | GCX61 |
| 14 x 236 | 232 | 22 | 22 | 29 | G ¾" | 17 | GC25 | GCX25 |

▲ For FB type
◆ Ø14mm for stainless steel

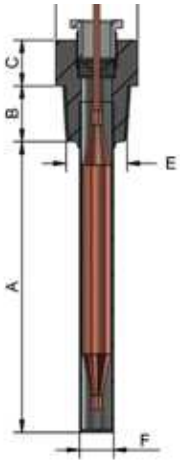


For NPT process connection, add the suffix "B" to the reference, e.g. GCX21B.
For a longer than standard length, add the suffix "-L" to the reference, example = GCX21-L (length"A" to be specified).
For a shorter than standard length, add the suffix "-C" to the reference, example = GCX21-C (length"A" to be specified).

Machined thermometer wells are only supplied when specified by the client.

For bulbs implanted in immersion pockets (except perforated immersion pockets) for gaseous fluid applications, a thermal bridge must be created between the bulb and the immersion pocket using a filler liquid (oil) or a heat-conducting paste.

The technology used by our temperature switches is vapour pressure. This ensures that the measurement will be made only on the bulb, without effect from the temperature in the capillary. As such, for capillary temperature switches, a standard length bulb will be retained even for extra-long bulbs.

## CAPILLARY PROTECTION


For all ranges greater than 125°C the sheath length is 10 to 20 cm less than that of the capillary.

## CAPILLARY CABLE GLAND
## (References such as PC** and PCX**)

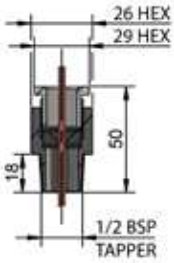


The capillary cable gland helps ensure tightness on the capillary outlet.

This accessory is supplied as standard on the GC and GCX models designated above but is optional on drilled-through designs.

# Dimensional drawings

## HOUSINGS

### Standard housing - Type: F

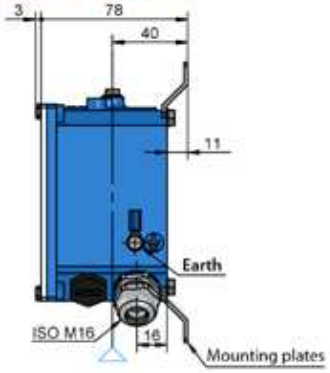


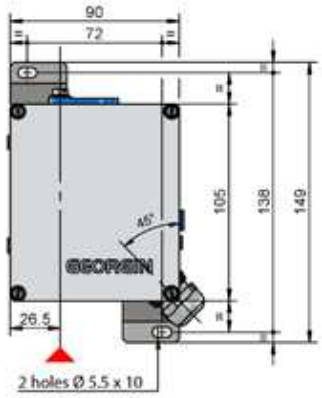


0.85Kg

### Polyester housing - Type: FPP

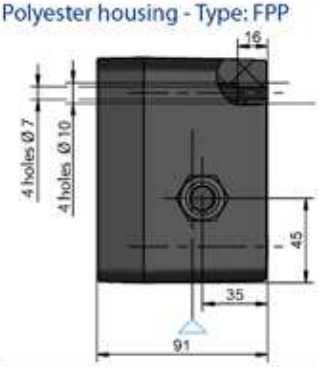


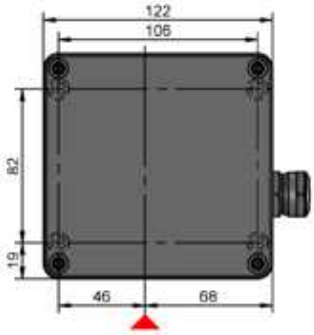


1.35kg

### Stainless steel housing - Type: FPX


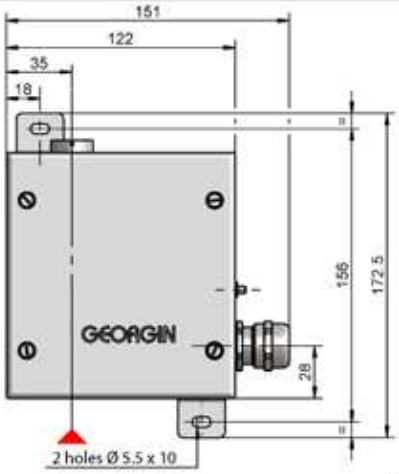


1.70kg

### Explosion-proof housing - Type: RTPF

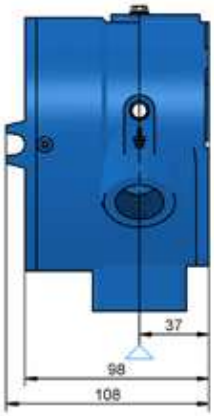


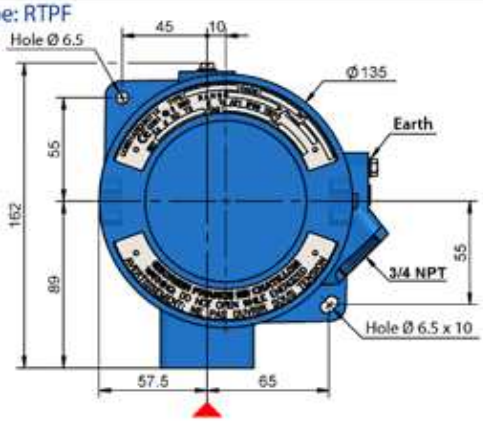


1.85kg

## SENSING ELEMENTS (Temperature)

### FC

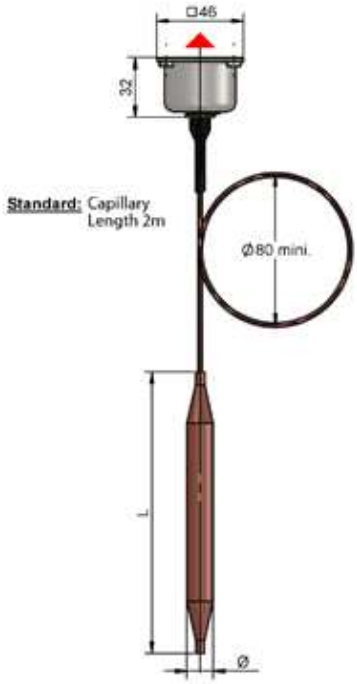


0.85Kg

### FB

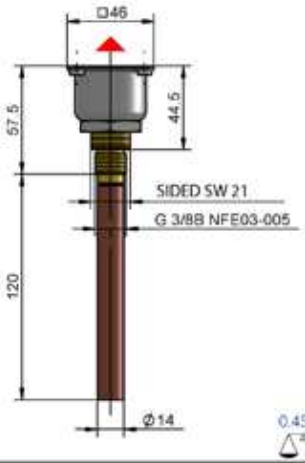


0.45kg

### FBA


0.35kg

The triangles ▲ (shown on front view) and △ (shown on right-hand view) represent the assembled instrument.
2D or 3D drawings are available as an option to be specified in the order.
Instrument mounting is subject to requirements; please refer to the assembly manual supplied with each instrument beforehand. As such, standard housings are supplied without mounting plates for (D)FML/T/S and with special plates for FD(H) and FV (drawings available on request).



**Dodavatel pro ČR:** o.z. MERES, HENNLICH s.r.o.● Českolipská 9, 412 01 Litoměřice
meres@hennlich.cz ● www.hennlich.cz/meres ● tel.: 416 711 203

## SENSING ELEMENT (Pressure Switches)

### DIAPHRAGM

FML/DFML

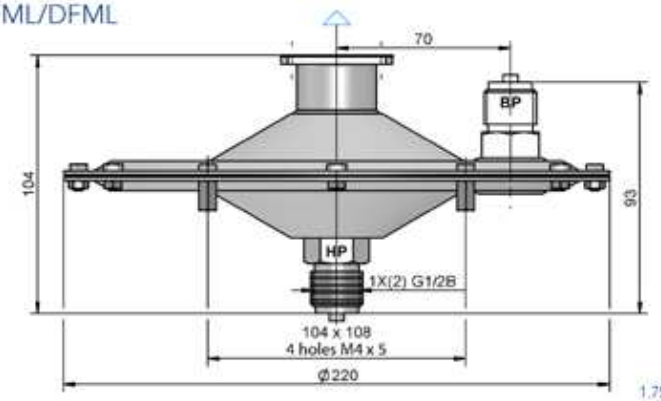


1.75 kg

FMT/DFMT

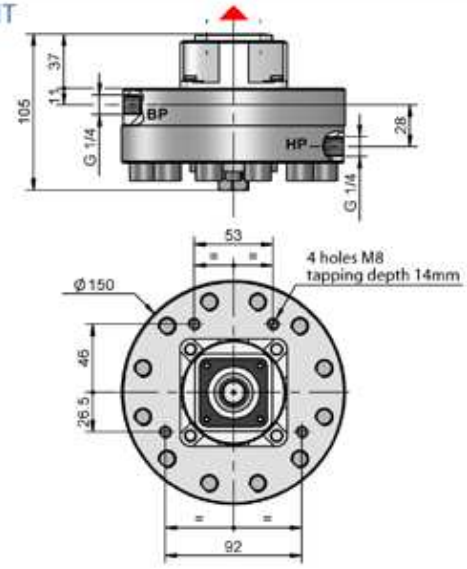


7.65 kg

FMS/DFMS

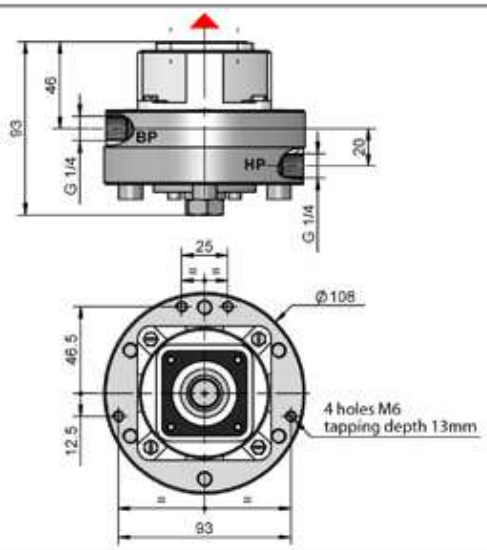


3.25 kg

FPA/FPAS

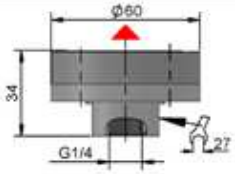


0.65 kg

### BELLOWS

FP (AX-FX-GX-LX-MX-NX)

FPH (GX)

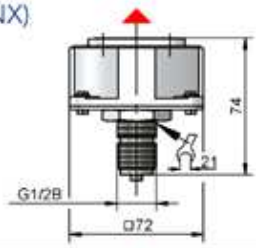


0.65kg

FP (KX-PX-QX-RX-SX)

FPH except (GX)

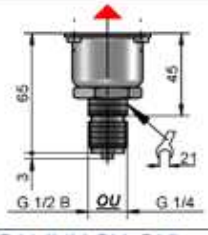


0.35 kg

FD (MX-PX-QX-RX-SX) - FDH (NX-PX-QX)

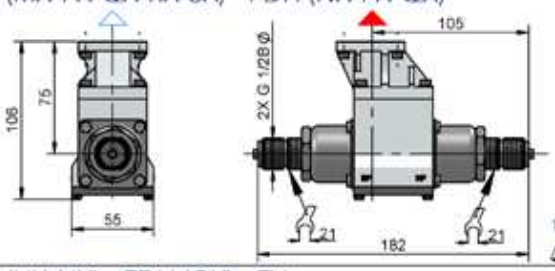


1.15 kg

FD (HX-NX) - FDH (GX) - FV

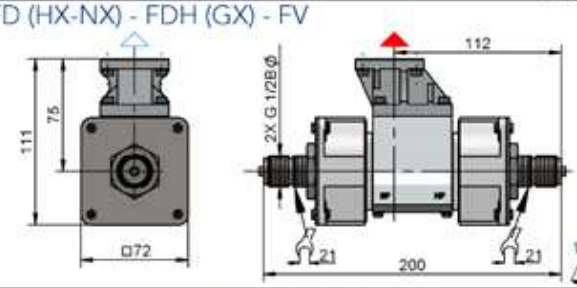


1.45 kg

### MANOMETRIC TUBE

FPL corrosion proof version

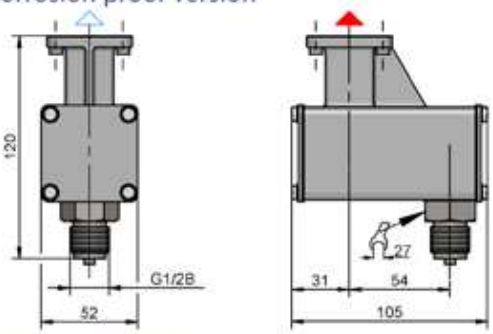


1.15 kg

FPL standard version

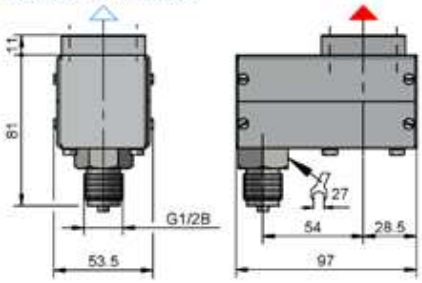


0.75 kg

The weights given are approximate and as a rough guide only and may vary according to the designs. The weight of the FC type thermostatic element is indicated for a 2-metre capillary. Dimensions are given in mm.

Safety for Industrial Process

Industrial **Range**

# F series
## Pressure switches and temperature switches

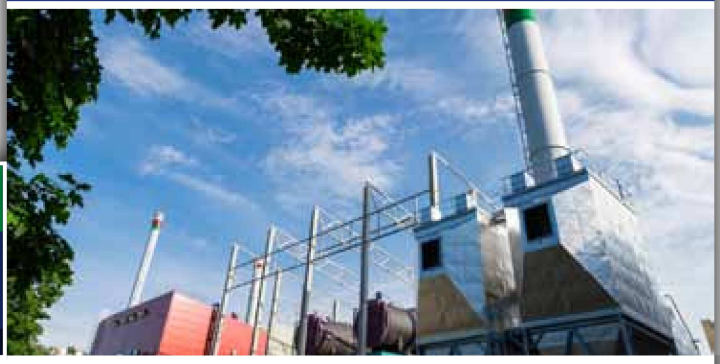

## CERTIFICATION FOR AREAS INVOLVING AN EXPLOSION RISK

F series pressure switches and temperature switches comply with Directive 2014/34/EU and are suitable for installation in areas involving an explosion risk. They are broken down into 4 construction and protection modes:

- Intrinsic Safety

Installation areas*: 0/1/2 and 20/21/22

- Increased safety or Explosion-proof safety

Installation areas*: 1/2 and 21/22

- Constructional safety (for pneumatic equipment)

Installation areas*: 1/2 and 21/22

*The protection index of the instruments affects the installation areas, refer to page 5 for more information.

## PRESSURE EQUIPMENT DIRECTIVE (PED)

Series F pressure switches satisfy the requirements set forth in Appendix I of PED 2014/68/EU. They are classified in Category IV as a safety accessory, and can be incorporated in a safety loop. Refer to our declaration of compliance for the models concerned and conditions of use.

## FUNCTIONAL SAFETY - SIL CAPABILITY

Georgin offers a comprehensive range of SIL products and guides its clients in securing their industrial sites to meet Instrumented Safety Function requirements in accordance with the Machinery Directive 2006/42/EC. The reputation of our F series pressure and temperature switches in terms of reliability has been rated based on an operational feedback analysis.
Our products allow SIL2 capability, with no redundancy or external monitoring in accordance with Markov 1oo1 architecture. Refer to the certificates for more information.

## TECHNICAL REGULATION (TR CU / TR TS) - FORMERLY GOST

TR CU (or TR TS in Russian) is the certificate of conformity for the customs union of the Russian Federation, Belarus, Kazakhstan and Armenia, it states compliance with Russian laws and standards and authorises imports.
Note that, as the metrology certificate is intended for measurement tools, it is not applicable to pressure switches and temperature switches.

## ELECTRICITE DE FRANCE ACCREDIATION NO. 85

## NATO ACCREDITATION CODE F3363

## NACE COMPLIANCE

316L stainless steel Bourdon tube and bellows-actuated pressure switches comply with NACE Standard MR0175/ISO 15156-3-2003.

fc-f-en-22-02-2017

**Régulateurs GEORGIN**
14-16, rue Pierre Sémard - BP 107 - 92323 CHÂTILLON Cedex France
Tel.: +33 (0)1 46 12 60 00 - Fax: +33 (0)1 47 35 93 98
Email: regulateurs@georgin.com

**www.georgin.com**

**Dodavatel pro ČR:** o.z. MERES, HENNLICH s.r.o.● Českolipská 9, 412 01 Litoměřice
meres@hennlich.cz ● www.hennlich.cz/meres ● tel.: 416 711 203